2-Person Climbing Wall
Size Specifications 1.2

WALL UPRIGHT BIRDS-EYE VIEW:

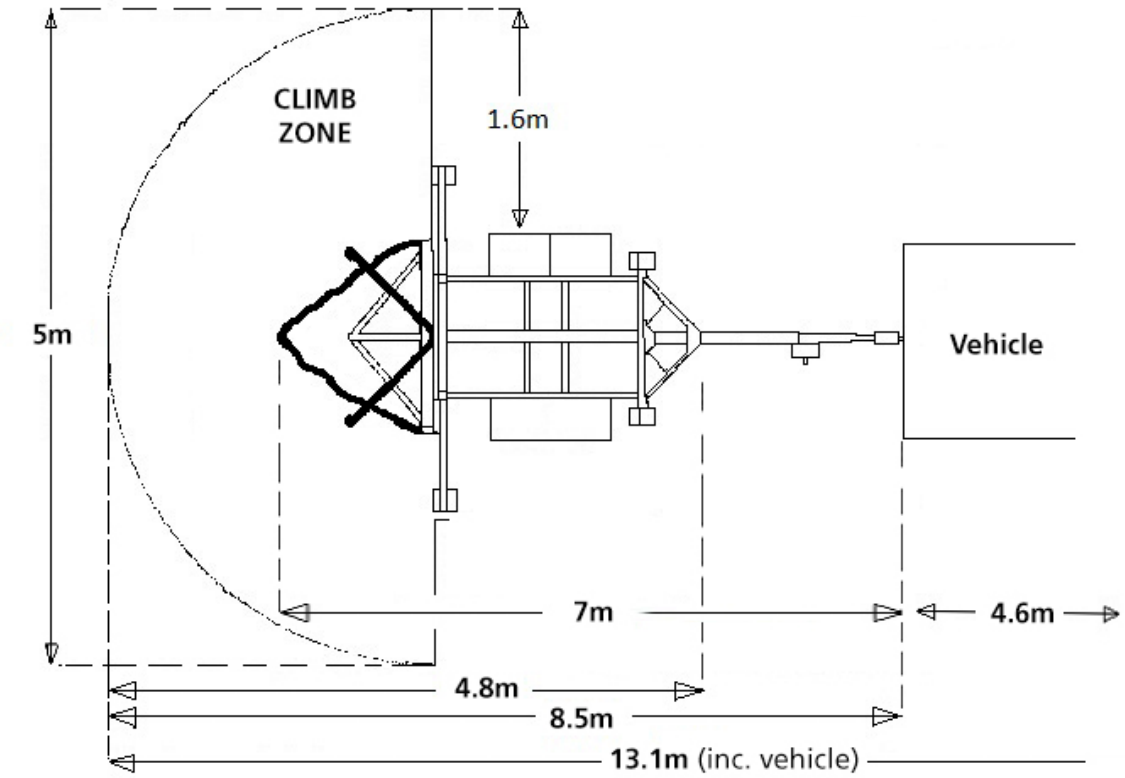

WALL DOWN / SIDE VIEW:

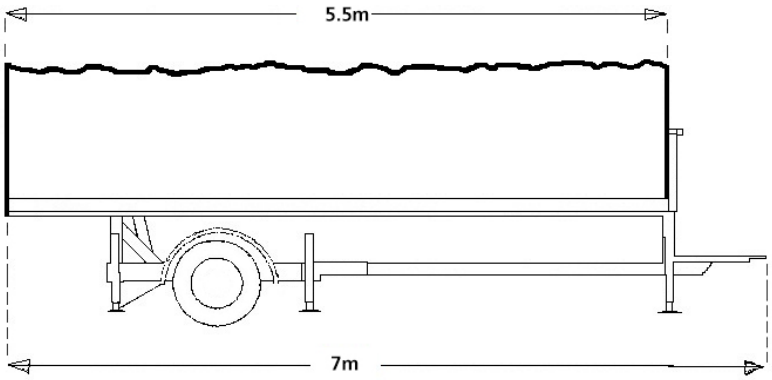

WALL DOWN / END VIEW:

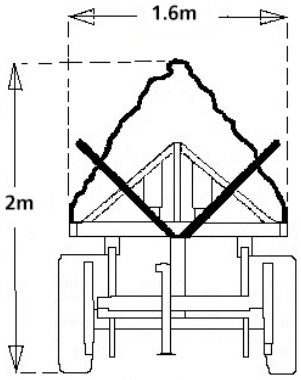

WEIGHT INFORMATION:

TRAILER - 1.0 Tonnes
VEHICLE - 1.5 Tonnes

Drawings for illustration purposes only and NOT to scale. Actual product may differ from images shown.

Event Higher Limited Swn Yr Awel, Rhymney Bridge, Tredegar, Caerphilly, NP22 5QT
Phone: 0845 3753286 info@eventhigher.co.uk www.eventhigher.co.uk Registered in England No 07869011